Technical Adaptation and Implementation of the 37 Sensor Kit on the ESP32 Platform using MicroPython

Álvaro Javier Viotti, Diego Joaquín Rossa, Nicolás Mario Feck

Computer Programming

Universidad Tecnológica Nacional Facultad Regional Rafaela

viottialvaro@gmail.com, dejotarossa@gmail.com, nicolasfeckfg@gmail.com

Abstract

This work presents the technical adaptation and implementation of the 37 sensor kit, originally designed for the Arduino architecture (5V), onto the ESP32 platform (3.3V) using MicroPython. The main objective is to provide a unified guide for engineering students to facilitate the transition towards 32-bit microcontrollers. The methodology included the electrical analysis of each module, circuit adaptation using limiting resistors, and the rewriting of the source code from C++ to Python. As a result, the operation of all sensors was validated, analog readings were optimized taking advantage of the 12-bit resolution, and wiring diagrams were documented. It is concluded that the migration is viable and enriches the didactic tools available for learning modern embedded systems.

Keywords: ESP32; MicroPython; Sensors.

1. Introduction

The advancement of embedded systems has shifted the educational focus toward 32-bit microcontrollers such as the ESP32, which are valued for their integrated WiFi/Bluetooth connectivity and processing power. However, a significant portion of commercially available educational hardware, such as the "37 Sensor Kit", was originally designed for Arduino's 5V logic and lacks robust native documentation for 3.3V environments.

This report documents the technical adaptation and implementation process of this kit on the ESP32 platform using MicroPython. The work addresses the existing technological gap by resolving voltage incompatibilities and translating traditional control logic into a high-level language.

To ensure reproducibility and open access to the generated resources, all source scripts, libraries, and examples developed in this project are hosted and available for download in the following digital repository: https://github.com/NicolasFeck/ESP32-37-Sensor-Kit-MicroPython

1.1. General Considerations

This document is conceived not merely as a technical report of the work performed, but primarily as a practical reference manual for future Electromechanical Engineering students. The central premise is to lower the barrier to entry for current technologies, preventing students from relying on scattered searches, complex script translations, or electrical adaptation calculations for basic functionality tests. The aim is for this material to serve as a reliable foundation upon which more complex projects can be built, focusing attention on application logic rather than resolving basic hardware incompatibilities.

1.2. Work Elements

For the execution of this integrative project, the following hardware resources and software tools were utilized:

- Sensor Kit: Standard set of 37 sensor and actuator modules.

- Microcontroller: ESP32 development board, model DevKitC V4 (38-Pin version).
- Programming Language: MicroPython (firmware v1.23 or higher), selected for its efficiency and readability in the educational context.
- Development Environment (IDE): Thonny IDE, used for writing and uploading scripts to the microcontroller.
- Circuit Design: Fritzing software, employed for creating the pictorial and schematic connection diagrams presented in this report.
- Version Control: GitHub platform, used for storage, change control, and public distribution of the project's source code.

2. Methodology

2.1 KY-001 Temperature Sensor

The main characteristics of this module include:

- Digital Sensor: Based on the **DS18B20** chip, providing temperature readings in degrees Celsius with configurable resolution (9 to 12 bits).
- Communication Protocol: Utilizes the 1-Wire bus, allowing multiple sensors to be connected to a single Digital Pin, as each sensor possesses a unique 64-bit serial address.
- Integrated Components: In contrast to the standalone DS18B20, the KY-001 module is mounted on a PCB including a 4.7kΩ pull-up resistor between the DQ (Signal) and VCC Pins, and an LED indicator for data transmission.

Although the operating range is between 3V and 5V, it is compatible with the 3.3V used by the ESP32. The Signal Pin (S) connects directly to Pin 5 of the microcontroller (see Figure 1). A notable feature is its measurement range of -55°C to +125°C. While the conversion time is approximately 750 ms for a full 12-bit conversion, a 1-second delay is implemented in the code to ensure stability.

2.2. KY-002 Vibration Switch

This module functions as a switch. Operating on this logic, the script is simplified to a binary verification of zero or one. The Signal Pin (S) acts as the input. When the module vibrates or oscillates sharply, the internal switch closes between Ground (GND) and S. Consequently, the signal discharges, and its value becomes 0. Due to its operation, the connection is established as shown in Figure 2, without utilizing the 5V Pin.

2.3. KY-003 Hall Effect Magnetic Sensor

This module is dedicated to the **Hall effect**, integrating the **A3144EUA** chip, a resistor, and an LED. It acts as a digital magnetic switch. Its main function is to detect the presence of a magnetic field (typically the south pole of a magnet) and toggle its output signal.When a magnetic field is detected, it sends a 0 (Low) and the integrated LED lights up; otherwise, it maintains a 1 (High).

Although the operating range is 4.5V to 24V, it is functional at 3.3V, albeit with a reduced detection distance. Pin 36 of the microcontroller is used for the input signal (see Figure 3).

2.4. KY-004 Button Switch

This module is essentially a push-button switch. The code operation is identical to that of the KY-002. The Signal Pin is energized, and when the button is pressed, it discharges, delivering a logic value of 0. As shown in Figure 4, the Power Pin is not utilized, as the microcontroller energizes the module through the Signal Pin using the internal `PULL_UP` configuration.

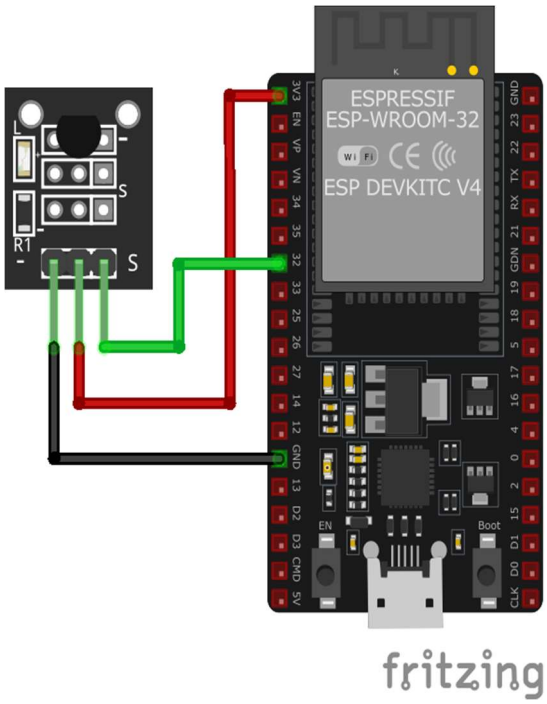

Figure 1. KY-001 connection diagram.

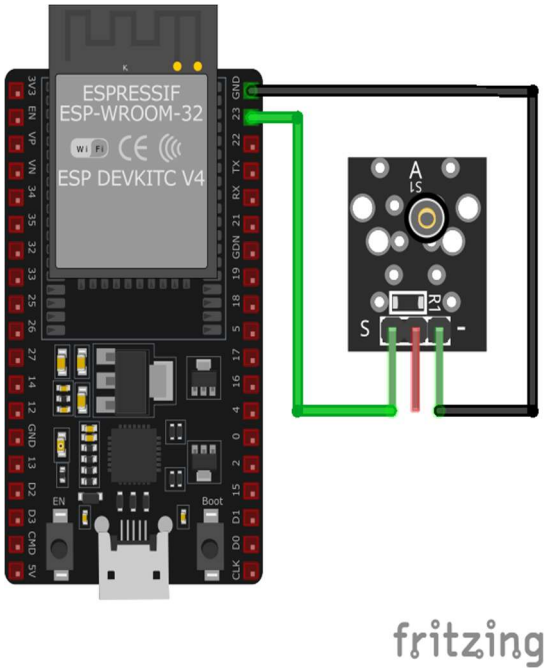

Figure 2. KY-002 connection diagram.

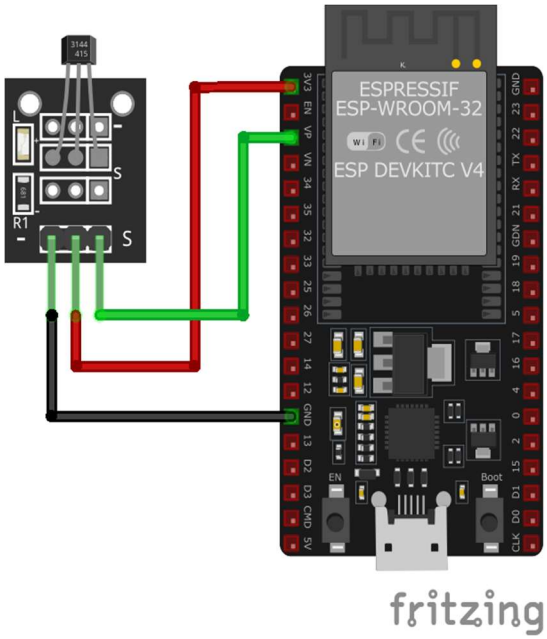

Figure 3. KY-003 connection diagram.

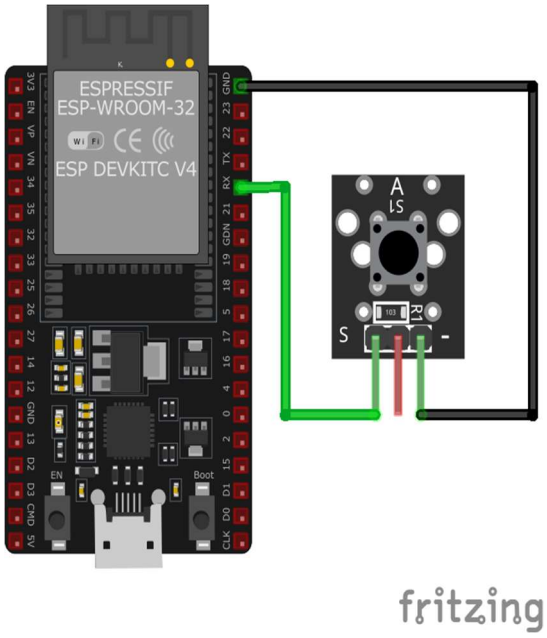

Figure 4. KY-004 connection diagram.

2.5. KY-005 Infrared Emission

This module is composed of an infrared (IR) LED. Specifically, the developed script consists of turning the LED on and off for one second using a `while` loop.

As demonstrated in Figure 5, a 36-ohm (Ω) resistor must be placed between Pin 32 and S, since the working voltage of the LED is only 1.5V.

If the exact resistance value mentioned is unavailable, it must always be substituted with a close higher value (for example: 39Ω). Lower values should never be used, as this would increase the circulating current above the safe limit, putting the integrity of the module at risk.

2.6. KY-006 Passive Buzzer

This module consists of a **passive buzzer**. As opposed to active buzzers, this sensor requires an oscillatory signal (square wave) to generate sound, allowing for frequency control.

The implemented script demonstrates this capability by generating two distinct tones via varying delay times in the oscillation loop: one loop generates a high-pitched tone with 1 ms delays, while the second generates a lower tone with 2 ms delays.

It should be noted in Figure 6 that only two of the three pins are utilized. The remaining pin is not connected to anything on the PCB.

2.7. KY-008 Laser Emitter

The operation logic is similar to the KY-005. Pin 32 is configured as an output, alternating between 1 (on) and 0 (off) at one-second intervals.

As shown in Figure 7, the Power Pin is not utilized since the digital output powers the laser directly.

2.8. KY-009 SMD RGB LED

This is an **SMD** (Surface-Mount Device) type **RGB** LED module. Unlike common LEDs, this component integrates three diodes (red, green, and blue) in the same package.

For this, two algorithms were designed. The first turns on the different colors at different intervals to observe the color mixing effect. In contrast, the code implemented in the second version demonstrates the capability to mix colors using **PWM** (Pulse Width Modulation).

Through the `gradient_rgb` function, the duty cycle of each color channel is varied from 0 to 1023. The software logic executes three sequential transition loops: first, it transitions from Red to Green (passing through Yellow), then from Green to Blue (passing through Cyan), and finally from Blue to Red (passing through Magenta), thus successfully traversing the entire visible chromatic spectrum smoothly.

As indicated in the code, it is necessary to place current-limiting resistors (75Ω for red and 27Ω for green/blue) to protect the component.

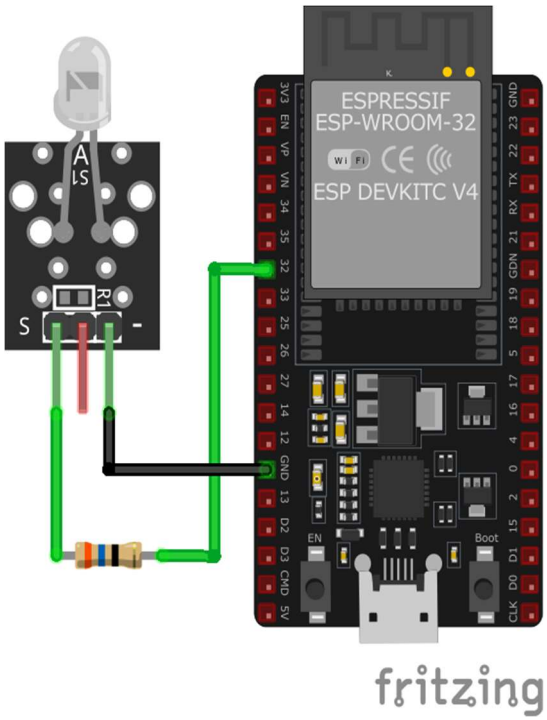

Figure 5. KY-005 connection diagram.

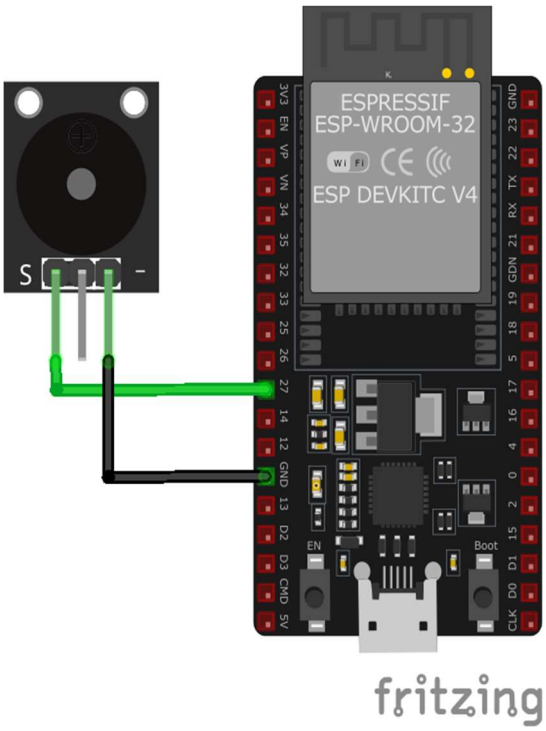

Figure 6. KY-006 connection diagram.

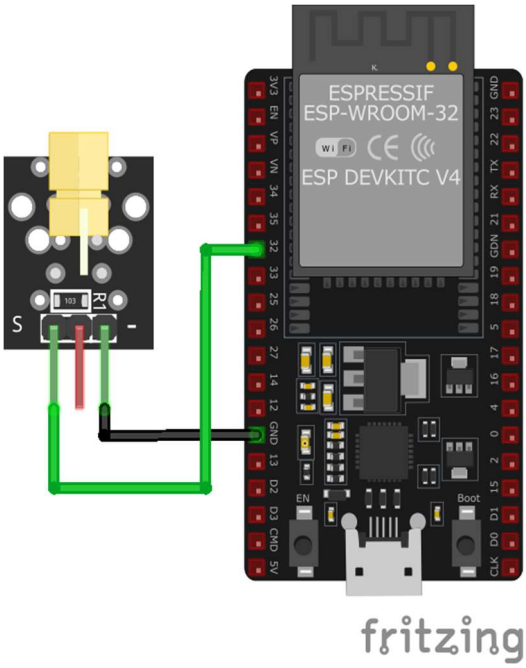

Figure 7. KY-008 connection diagram.

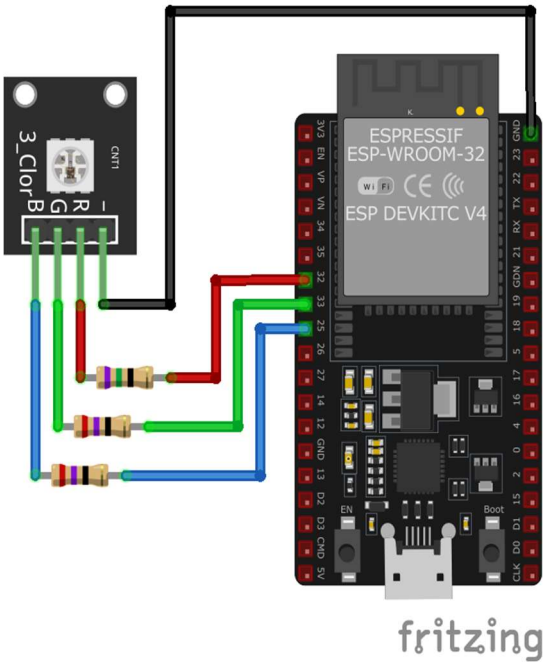

Figure 8. KY-009 connection diagram.

2.9. KY-010 Light Blocking

Known as an optical barrier or photo-interrupter, this sensor uses a facing light emitter and receiver. When an opaque object interrupts the beam, the signal changes. A reading of 0 indicates the slot is free, while a 1 indicates blockage.

See Figure 9 that this sensor is able to work correctly with the 3.3V of the ESP32.

2.10. KY-011 Two Color LED

This module contains a 5mm common-cathode bicolor LED (Red and Green).

Similar to the RGB module, the script utilizes PWM to control intensity. The `gradient_pwm` function inversely varies the brightness of the red and green LEDs to create a fading effect. 100Ω series resistors are required for the Signal Pins (see Figure 10).

2.11. KY-012 Active Buzzer

This is an active buzzer with an internal oscillator. It generates sound automatically when energized.

The code simply sends a high value to Pin 27 to activate it. Its frequency is fixed, typically around 2.5 kHz.

Note in Figure 11 that, just like the passive buzzer, there is one leftover pin which is not connected to anything.

2.12. KY-013 Analog Temperature Sensor

This module is an analog temperature sensor based on an **NTC** (Negative Temperature Coefficient) thermistor. Its operating principle integrates a hardware solution and a software calculation.

Physically, the module acts as a resistive divider: it incorporates a fixed 10 kΩ resistor in series with the thermistor to transform resistance variations (caused by heat) into voltage variations readable by the microcontroller.

The code reflects this logical sequence in two stages. First, it uses the voltage divider law to solve for and calculate the current resistance of the thermistor (`R2`) from the read voltage.

Once this actual ohmic value is obtained, it is input into the **Steinhart-Hart** equation (using coefficients c1, c2, and c3) to perform the final conversion to degrees Celsius with greater precision.

It is worth noting that connecting the sensor correctly is important, taking into account which pins correspond to the fixed resistor and which to the thermistor.

Although the schematic in Figure 12 is the ideal one, in practice, the Pin Layout was found to be inverted.

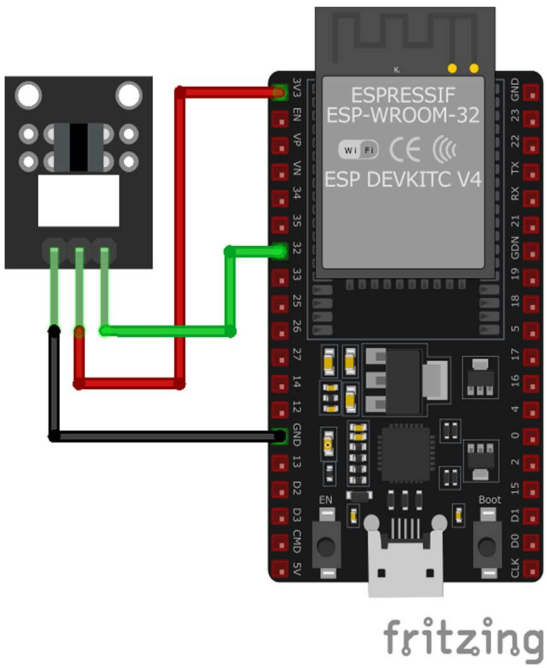

Figure 9. KY-010 connection diagram.

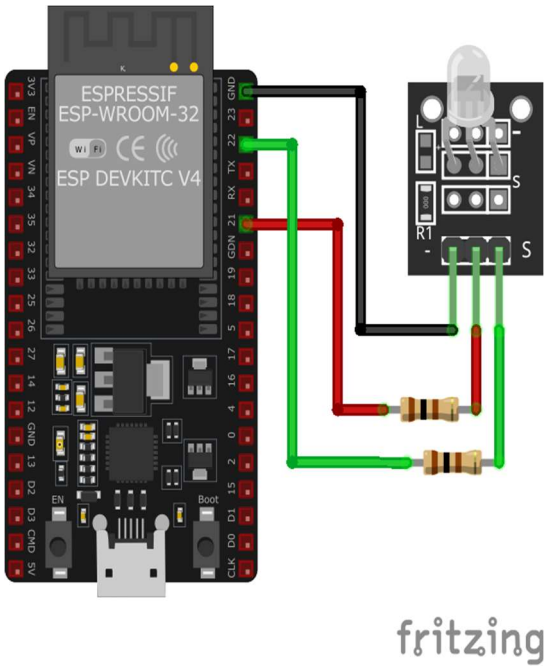

Figure 10. KY-011 connection diagram.

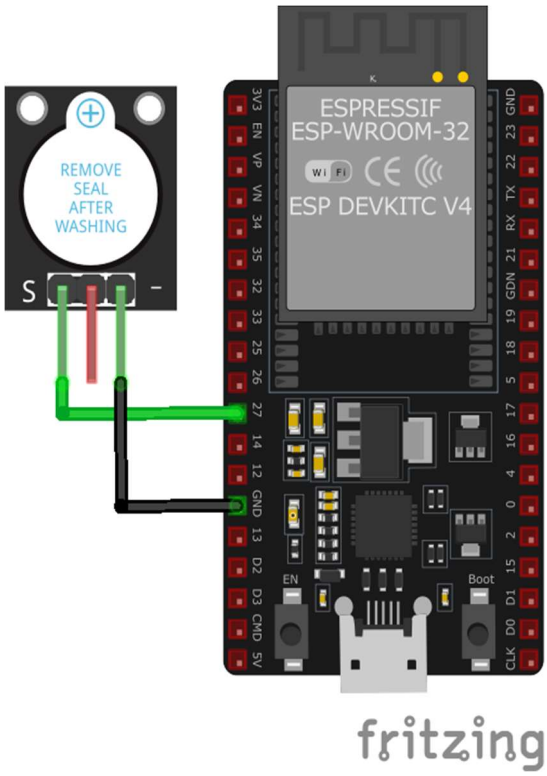

Figure 11. KY-012 connection diagram.

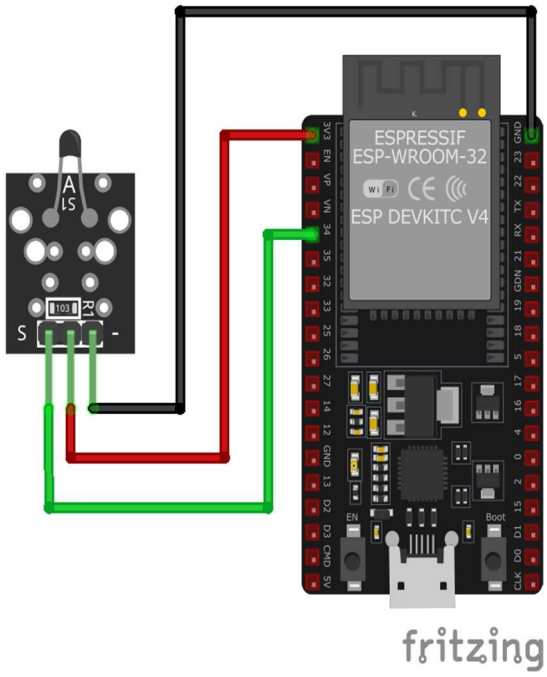

Figure 12. KY-013 connection diagram.

2.13. KY-015 Temperature and Humidity sensor

This module integrates the **DHT11** sensor, capable of measuring both temperature and relative humidity digitally.

In contrast to analog sensors, this one uses a proprietary communication protocol. Therefore, in the script, the specific library is imported with `import dht`. Through the `sensor.measure()` function, the ESP32 obtains both values simultaneously and displays them in the console.

As shown in Figure 13, the DHT11 operates with a range of 3.3V to 5V, so no resistors or other elements are needed to adapt the power supply.

2.14. KY-016 RGB LED

This module is functionally identical to the KY-009 but utilizes a 5mm **DIP** (Dual In-line Package) RGB LED instead of a surface-mount one.

Since its operating principle is the same, the same RGB gradient algorithm using PWM is employed.

As shown in Figure 14, no additional resistors are required to adapt the voltage, as the module integrates them.

2.15. KY-017 Tilt Switch

This module is a tilt switch that utilizes mercury internally. When the sensor tilts, the drop of mercury closes or opens the circuit.

The code monitors the Digital Pin (Pin 3). If the value is 0, it indicates that the mercury has closed the contact ("On" position), turning on the indicator LED. Otherwise, the circuit is open.

Although Figure 15 shows the power connected to 3.3V, in practice it may remain unconnected , as the sole function of this pin is to energize the module's built-in LED.

2.16. KY-018 Photoresistor

This sensor is a photoresistor or **LDR** (Light Dependent Resistor). It is an analog component whose resistance varies according to the intensity of incident light.

The program classifies the reading into three states using software-defined thresholds: "Darkness" is considered any analog value below 500, "Dim light" covers values between 500 and 3000, and "Bright light" occurs when the reading saturates the sensor above 3000. This demonstrates how to interact with analog thresholds for logical decision-making.

As shown in Figure 16, only the pins directly connected to the LDR are used. This sensor can also work with the resistive divider logic, like the KY-013, by using all three available pins.

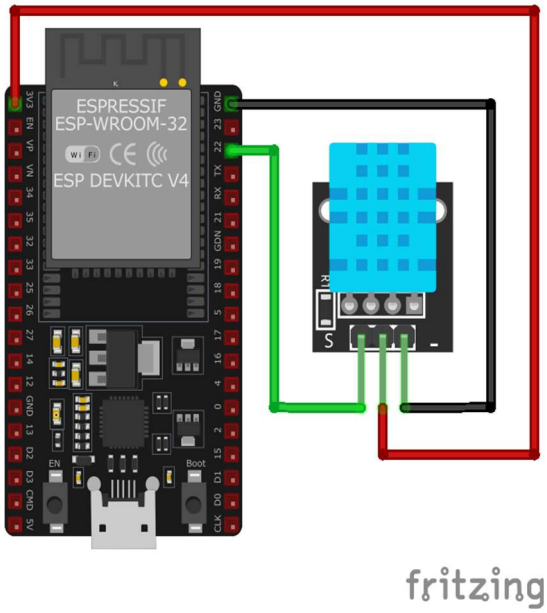

Figure 13. KY-015 connection diagram.

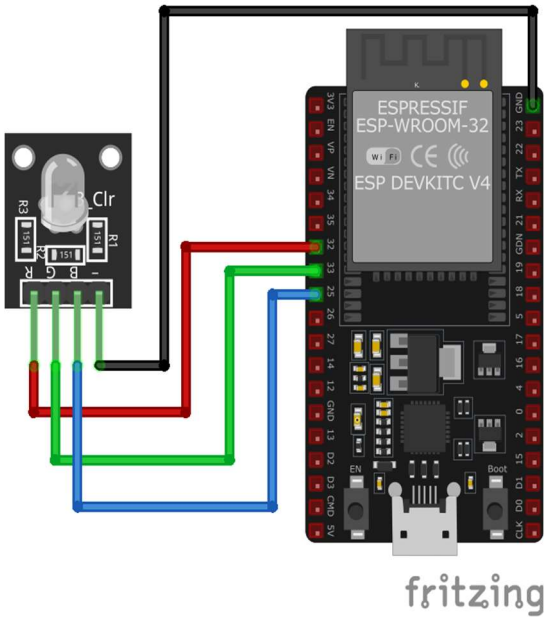

Figure 14. KY-016 connection diagram.

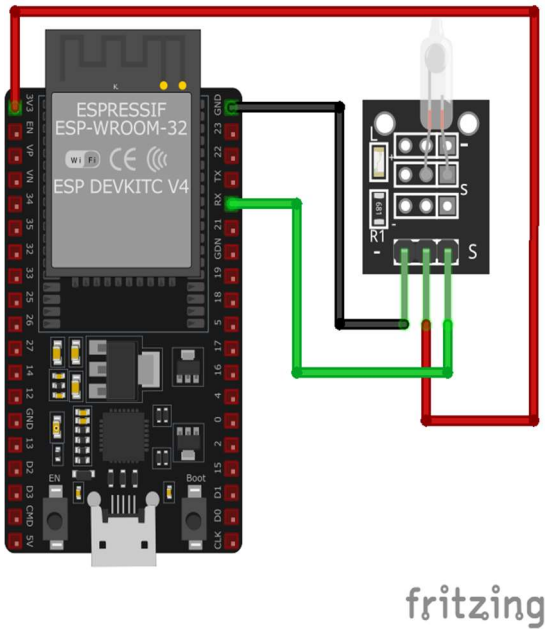

Figure 15. KY-017 connection diagram.

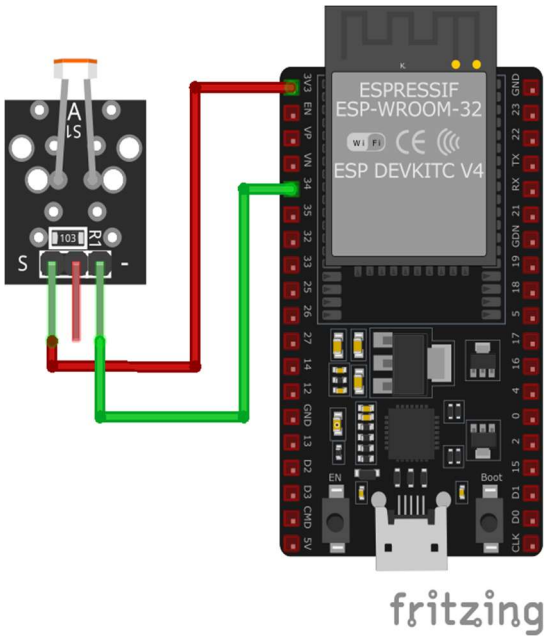

Figure 16. KY-018 connection diagram.

2.17. KY-019 Relay Module

This module is composed primarily of a relay. It functions as an electronically controlled switch that allows for handling higher power loads isolated from the microcontroller.

The code used activates or deactivates Pin 4. Sending a logical '1' energizes the relay coil, and the mechanical contact switches pins. Specifically, the relay has two Output Pins: normally open and normally closed. This allows for the use of activation or deactivation logic for power circuits depending on the module's application.

As observed in Figure 17, the KY-019 contains an SMD transistor. This component is responsible for using the small current from the signal to power its base , thereby transferring the current load of the internal coil to the 3.3V supply.

2.18. KY-020 Ball Switch

This module is commonly known as a Ball Switch. As opposed to the KY-017 which uses mercury, this sensor contains a small conductive metal sphere that closes the circuit when the module is tilted in a specific direction.

The code operation is of the digital binary type. Similar to other sensors, an if/else conditional structure is used to determine the value of the Source Pin. If it is in a low state (0), it implies the switch is closed ; otherwise, the circuit is open.

As represented in Figure 18, connecting the 3.3V Power Pin is not required.

2.19. KY-021 Mini Reed Switch

It consists of two ferromagnetic reeds encapsulated in a small glass tube under vacuum. These reeds make physical contact only in the presence of a magnetic field.

The implemented script follows the same logic used in other switch-type sensors. The S Pin is connected to number 3 on the ESP32, which reads a logical state. As seen in Figure 19, the connection does not require supply voltage for operation.

2.20. KY-022 Infrared Receiver

This module is a **VS1838B** infrared receiver designed to receive remote signals.

The working code shows a direct digital reading from Pin 33 of the microcontroller (the sensor's Source Pin). It is important to note that the sensor operates with negative logic: when it receives an IR signal, the output drops to 0 (Low).

In this case, connecting the 3.3V power as shown in Figure 20 is necessary. Without power, the sensor does not function.

The sensor operates with a supply voltage between 2.7V and 5.5V.

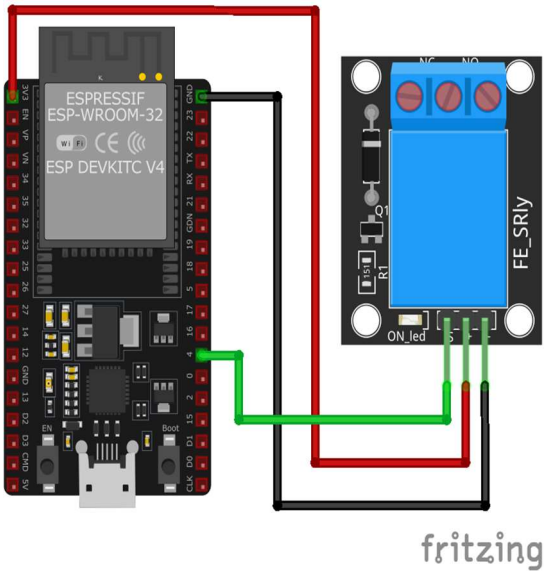

Figure 17. KY-019 connection diagram.

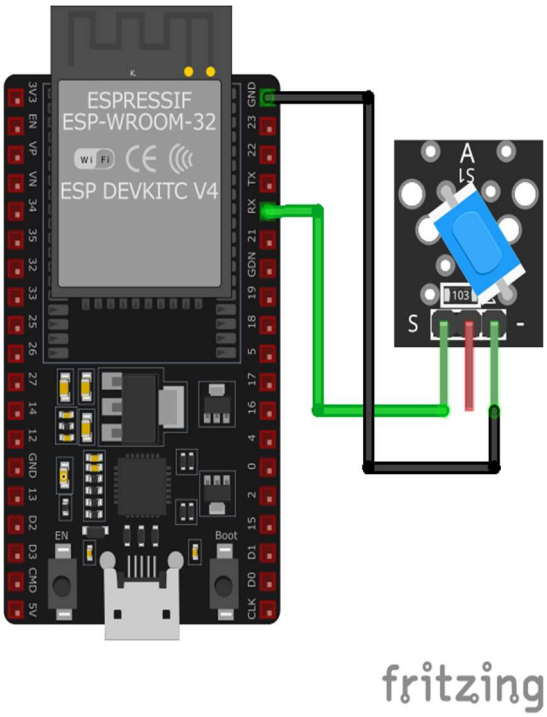

Figure 18. KY-020 connection diagram.

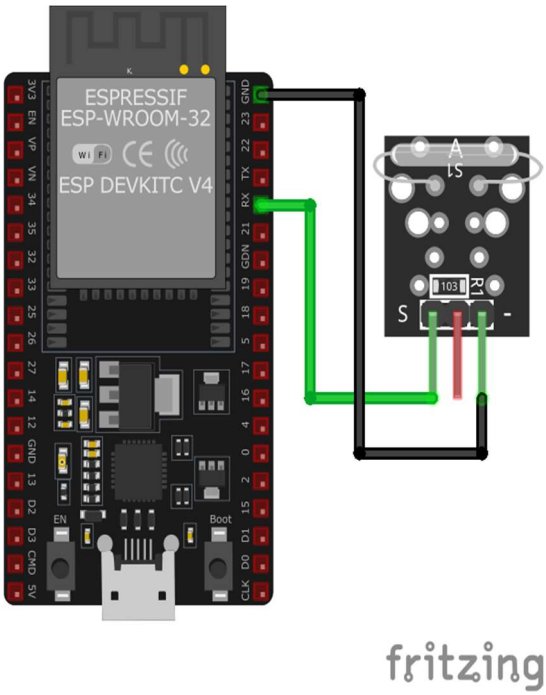

Figure 19. KY-021 connection diagram.

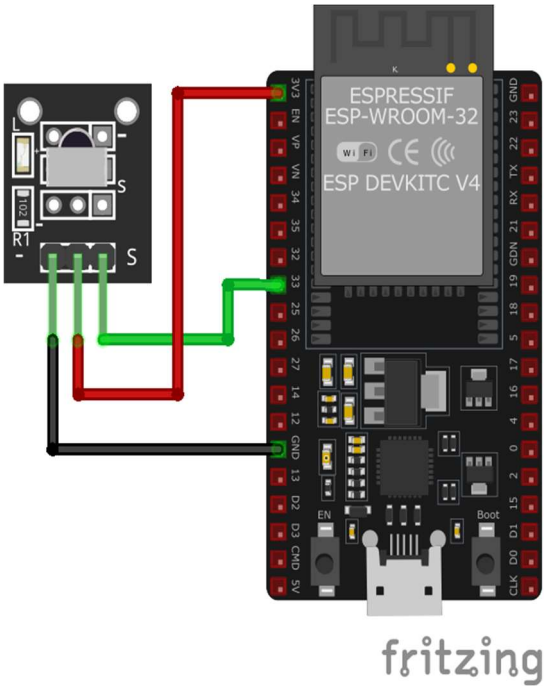

Figure 20. KY-022 connection diagram.

2.21. KY-023 Joystick

This is a dual-axis Joystick module. Mechanically, it consists of two potentiometers (one for the X-axis and one for the Y-axis) and a central push-button.

Due to its nature, the code employs two channels of the ESP32 **Analog-to-Digital Converter** (ADC) (Pins 34 and 35) to read the lever's position. The `ATTN_11DB` attenuation is configured to allow full-range readings (up to 3.3V). Additionally, digital Pin 32 is read to detect button presses.

As the sensor is arranged in Figure 21, the value X = 0 and Y = 0 is found at the bottom left. Conversely, the maximum digital value of X = 4095 and Y = 4095 is found at the opposite end (top right).

2.22. KY-024 Linear Hall Effect Sensor

This sensor has an analog output that varies proportionally to the intensity and polarity of the detected magnetic field: when the analog value rises, it indicates the presence of a south pole, whereas when this value falls, it corresponds to a north pole.

The code leverages both outputs of the module: it uses the analog input (Pin 34) to measure field intensity, and the digital input (Pin 35) which acts as a trigger when a certain threshold, adjusted via the integrated potentiometer, is exceeded.

Although Figure 22 shows both pins connected, their usage and the detection threshold adjustment will depend on the module's application.

2.23. KY-025 Reed Switch

This module is a more robust version of the KY-021. It uses a Reed Switch coupled to an **LM393** comparator, allowing it to offer both a clean digital output and an analog one.

In the code, the digital output (D0) is prioritized to detect the presence or absence of a magnet. Although the code also reads the analog value, in this type of sensor (essentially a switch), the analog reading typically shows extreme digital values. It should be noted that the adjustment potentiometer does not affect the Analog Pin reading; it only affects the trigger point of the digital signal.

As with the KY-024 sensor, the connection of the digital and Analog Pins will depend on the specific application.

2.24. KY-026 Flame Sensor

This sensor is designed to detect flames or fire sources. It is based on a photodiode or phototransistor sensitive to the wavelength of infrared light emitted by fire (generally between 760 nm and 1100 nm).

The implemented code monitors Digital Pin 35 with binary logic to alert of the presence of fire. Simultaneously, it reads the analog value on Pin 34, which would allow advanced applications to determine the proximity or intensity of the flame.

As observed in Figure 24, this module also possesses an adjustment potentiometer , the function of which is to modify the reading sensitivity; in other words, it requires prior calibration.

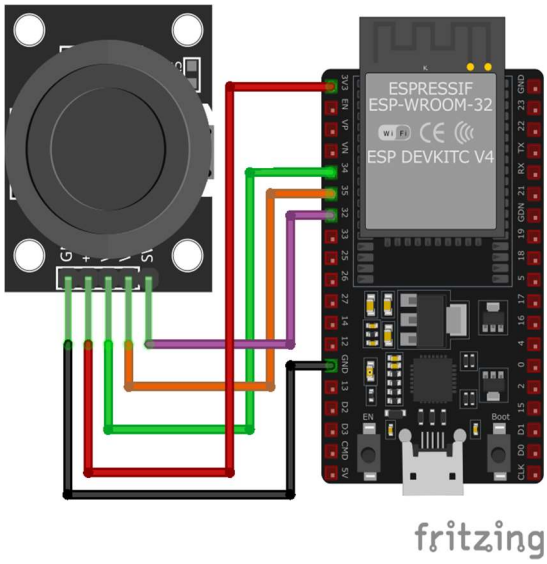

Figure 21. KY-023 connection diagram.

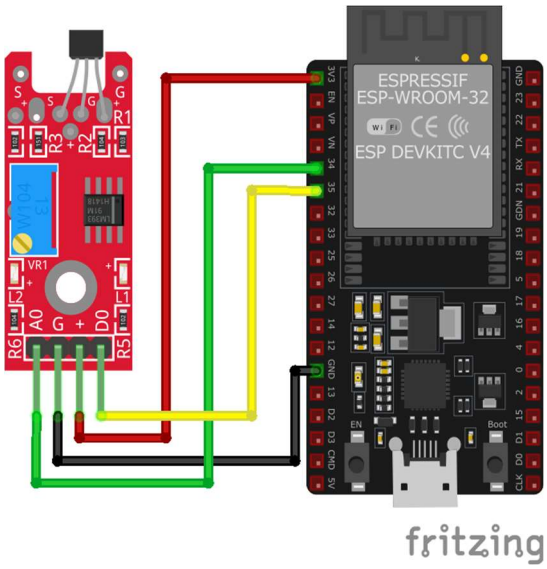

Figure 22. KY-024 connection diagram.

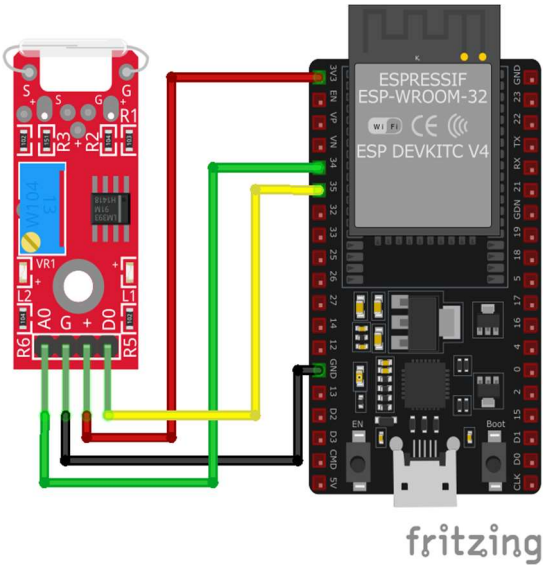

Figure 23. KY-025 connection diagram.

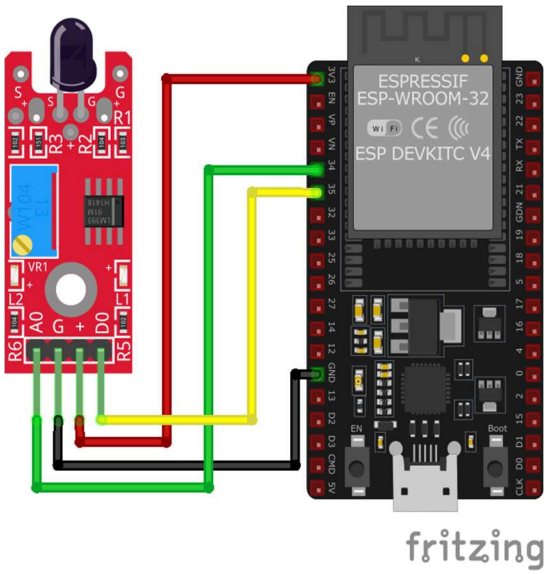

Figure 24. KY-026 connection diagram.

2.25. KY-027 Two Pieces Light Cup

Known as Light Cup, this module combines a mercury tilt switch and an LED on the same board. They are used in pairs to work with different tilt logics.

Specifically, the code works with a conditional (`if`) where both switches (hence the use of `and`) must be closed to activate the indicator LEDs. To implement an 'OR' logic condition the `and` **logical operator** should be changed to `or`.

Note in Figure 25 that the connection of Pins 4 and 5 is solely to power the integrated LEDs on the PCBs.

2.26. KY-028 Digital Temperature Sensor

This module is a digital temperature sensor utilizing an **NTC thermistor**, similar to the KY-013, but mounted alongside an **LM393** comparator to offer a calibratable digital output.

The script is one of the most complete, as it performs the full mathematical conversion of the analog value. To do this, it defines the component's physical constants: a base resistance (`R0`) of 10 kΩ at 25°C and, fundamentally, the Beta coefficient of the thermistor (3950). Using the Beta parameter equation, it transforms the calculated electrical resistance into a precise temperature in degrees Celsius.

See Figure 26 to identify the connection of the analog (A0) and digital (D0) outputs.

2.27. KY-029 Mini Two Color LED

This module is a common-cathode red and green bicolor LED. In contrast to the KY-011, this one is 3mm rather than 5mm.

The code uses **Pulse Width Modulation** (PWM) on Pins 21 and 22. The `gradient_pwm` function alters the duty cycles inversely: as the red intensity increases, the green decreases, generating a smooth visual mix between both colors.

Note that, as demonstrated in Figure 27, the connection is exactly the same as in the KY-011.

2.28. KY-031 Tap Module

This module is an impact or knock sensor. Internally, it contains a thin spring very close to the negative pin plate. When the sensor receives a sufficiently strong blow or vibration, the spring oscillates and touches the metal contact, momentarily closing the circuit.

The code uses the `PULL_UP` resistor configuration on Pin 23. This means the normal state is 1 (High). When a knock is detected, the circuit closes to Ground and the value drops to 0. In other words, it uses binary logic.

To use this sensor, connecting the 5V Power Pin (3.3V for the ESP32) is not necessary.

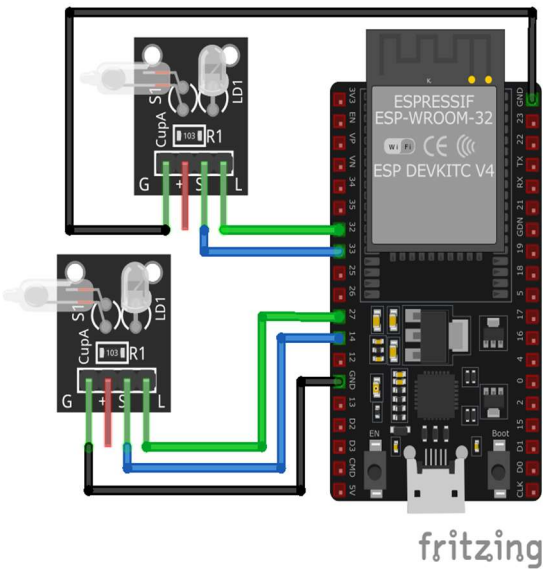

Figure 25. KY-027 connection diagram.

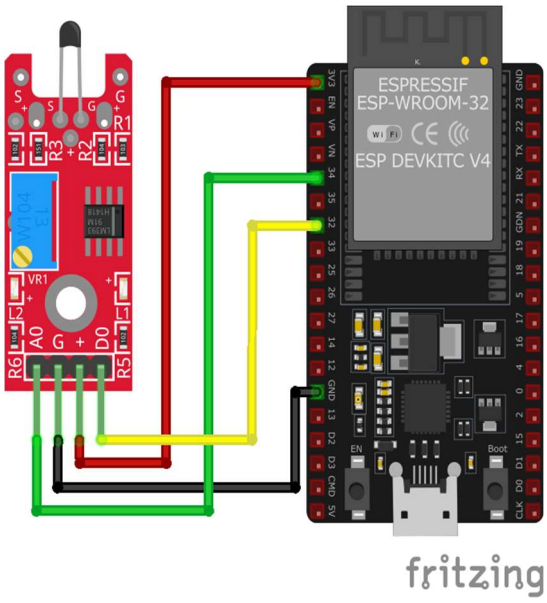

Figure 26. KY-028 connection diagram.

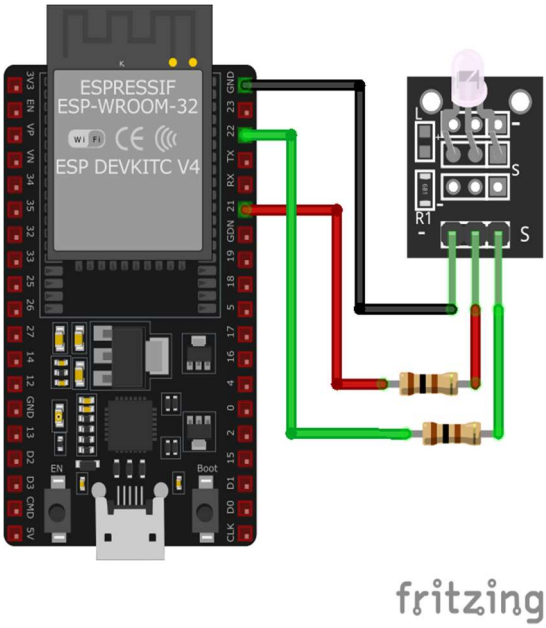

Figure 27. KY-029 connection diagram.

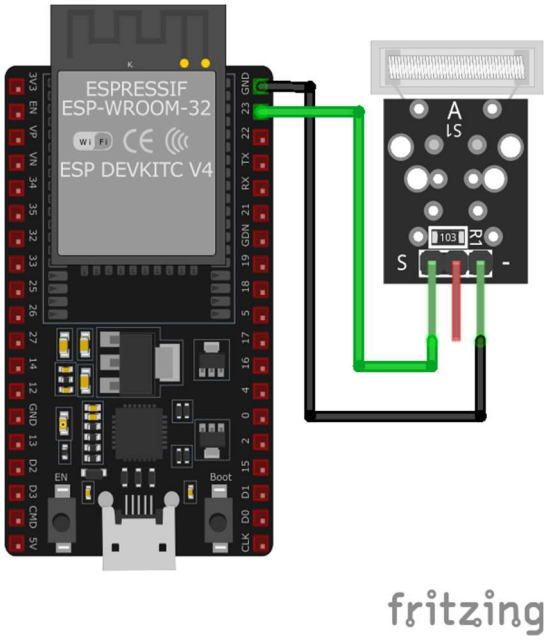

Figure 28. KY-031 connection diagram.

2.29. KY-032 Obstacle Avoidance Sensor

It possesses an IR emitter and receiver; the emitter launches a beam of light that, if it encounters an object, bounces back and is captured by the receiver. Its detection distance is adjustable via a potentiometer on the board.

The use of the EN Pin is omitted for practical reasons. The reason is that this module comes from the factory with a jumper placed in the EN position, keeping the sensor permanently activated (Enable). To use the EN Pin and control the sensor's on/off state from the microcontroller, it would be mandatory to physically remove said jumper, which is unnecessary for standard continuous operation.

The code reads the digital state of the sensor. Due to the inverse logic habitual in these modules, a value of 0 indicates that the infrared light has bounced back (an obstacle detected). If the value is 1, no obstacles are detected.

See Figure 29 for the adjustment potentiometers. The one on the left adjusts the detection distance, while the one on the right adjusts the IR emission pulse frequency.

2.30. KY-033 Tracking Sensor

Its operating principle is similar to the KY-032 (using IR reflection), but it is calibrated to detect extreme contrasts at very short distances, typically the difference between a black line (which absorbs light) and a white background (which reflects it).

This sensor shares logic with the KY-032, as both deliver a simple digital signal (0 or 1) depending on light reflection.

As demonstrated in Figure 30, this module contains its corresponding sensitivity adjustment potentiometer. This allows the sensor to be calibrated and function under different ambient light conditions.

2.31. KY-034 Color Flash LED

This module consists of a 7-color LED with an embedded **integrated circuit** (IC). In contrast to RGB modules that require external control (such as the KY-009), this sensor cycles through colors automatically and randomly upon receiving power.

Due to this internal automation, the code is extremely simple: it only requires sending a logical '1' to Pin 21 to energize the module. The "light show" is managed entirely by the component, not the ESP32.

Although three pins are observed in Figure 31, the middle one is not connected to anything. That is, power is supplied directly from the S Pin.

2.32. KY-035 Analog Hall Effect Sensor

This is an analog **Hall** effect sensor based on the **49E** chip. Compared to the KY-003 (digital), this module delivers a variable voltage proportional to the strength and polarity of the detected magnetic field.

The script takes advantage of this linear characteristic using the ESP32 ADC (Pin 34). In addition to reading the raw value (from 0 to 4095), it performs a mathematical calculation to convert that reading to real voltage, allowing for the measurement of magnet intensity. It is worth noting the importance of using 3.3V to power the chip for it to function.

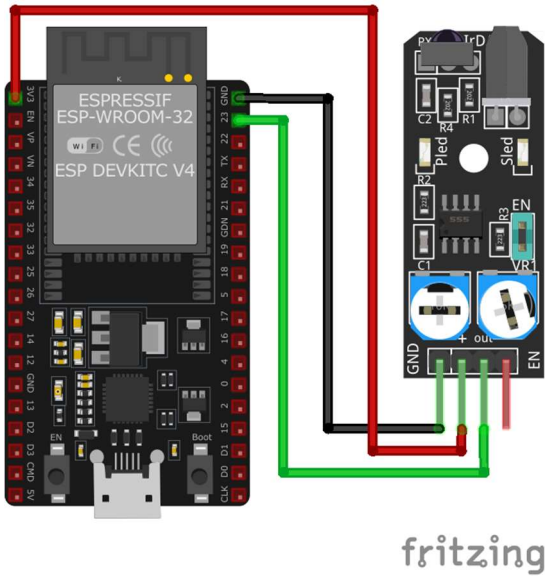

Figure 29. KY-032 connection diagram.

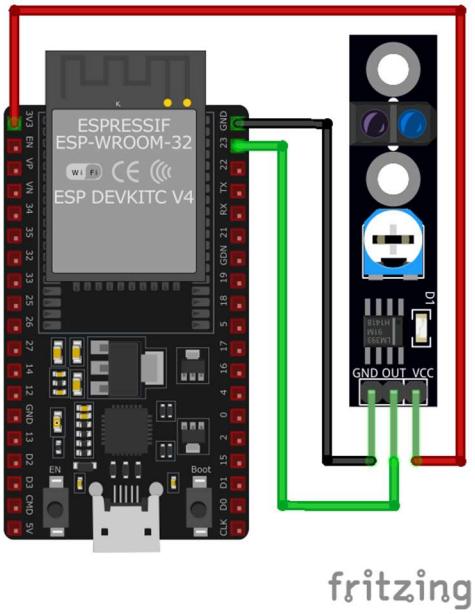

Figure 30. KY-033 connection diagram.

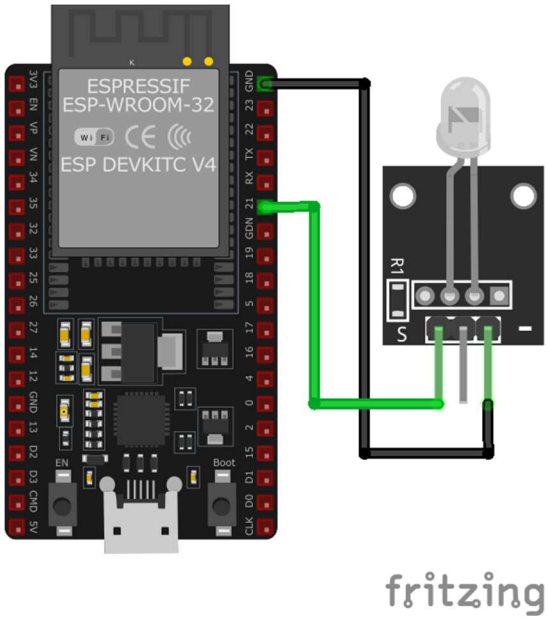

Figure 31. KY-034 connection diagram.

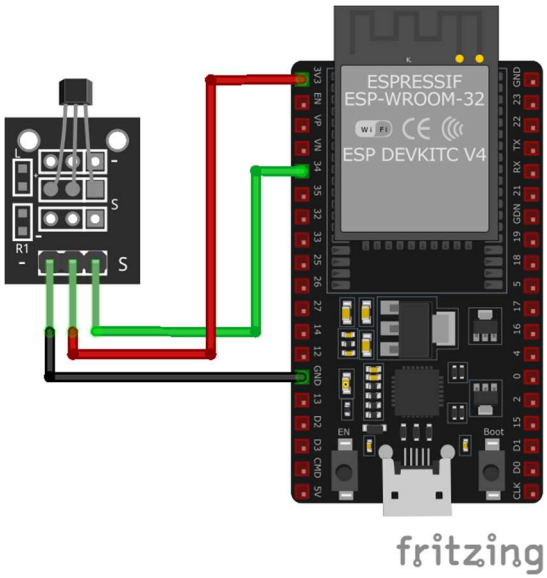

Figure 32. KY-035 connection diagram.

2.33. KY-036 Touch Sensor

It uses a **Darlington transistor** to amplify the small alterations in conductivity that occur when the human body touches the component's base.

Characteristically, both digital and analog logic can be used. The code demonstrates the module's versatility by reading both outputs: the analog (Pin 34), which varies according to contact intensity, and the digital (Pin 35), which acts as a touch switch ("Touched" / "Untouched").

Observe in Figure 33 that this module contains a potentiometer to adjust the obtained readings.

2.34. KY-037 High Sensitivity Sound Sensor

Known as the Big Sound Sensor, its main component is a microphone that captures sound waves and converts them into electrical signals.

The module features two outputs: an analog (AO) that delivers the amplified audio signal in real-time, and a digital (DO) that activates when the sound level exceeds a certain threshold. This threshold is adjustable via the blue potentiometer integrated on the board, which regulates the reference voltage of the **LM393** comparator.

In the code, the analog input (Pin 34) is used to read sound intensity in a range from 0 to 4095. Simultaneously, it displays the value of the digital output coming from Pin 32 in the terminal. Note in Figure 34 the presence of the potentiometer for module calibration.

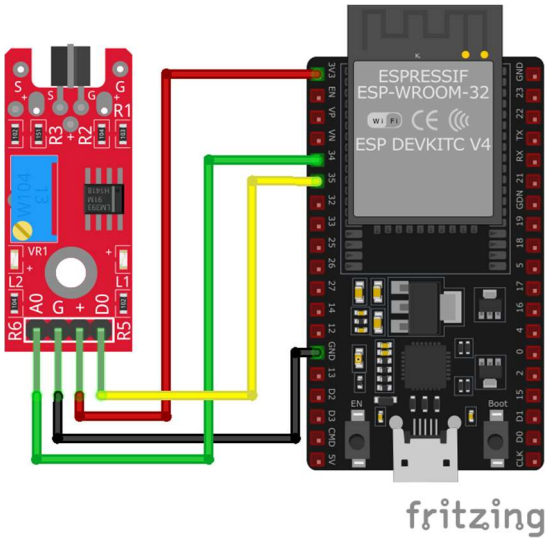

Figura 33. Esquema de conexión KY-036.

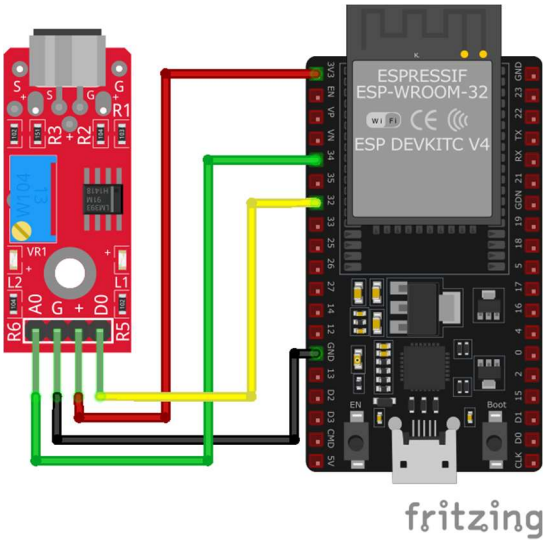

Figura 34. Esquema de conexión KY-037.

2.35. KY-038 Low Sensitivity Sound Sensor

Functionally it is almost identical to the KY-037. Both share the same basic circuit (**LM393** comparator and analog/digital outputs), but this one differs by having a smaller diaphragm microphone. This physical difference implies that the KY-038 has slightly lower sensitivity and is more directional than its large counterpart, making it useful for detecting loud sounds or direct impacts instead of subtle ambient noise.

Given that its operation logic is the same, the same code block as the previous sensor is used. The analog reading reflects the intensity of the captured sound, while the digital output switches state (from 0 to 1) when the sound exceeds the limit manually established with the calibration screw. See in Figure 35 that the connection method is exactly the same as the KY-037.

2.36. KY-039 Heartbeat Sensor

This sensor is designed to measure heart rate via **photoplethysmography**. An IR LED illuminates the finger, and a phototransistor measures the amount of light passing through the skin, which varies with blood pumping. The algorithm developed for this module is the most complex of the set due to the noisy nature of the captured analog signal. To obtain reliable readings, the algorithm does not interpret the raw ADC value but processes the signal in three critical stages:

- Signal Filtering (Smoothing): An Exponential Moving Average (EMA) filter is implemented. Using a smoothing factor of 0.75, the code prioritizes signal history over sudden instantaneous changes. This eliminates high-frequency noise, allowing for work with a cleaner wave (`filtered_value`).
- Peak and Slope Detection: Instead of looking for a fixed voltage value, the algorithm analyzes the difference between the current and previous signal reading. A possible heartbeat is identified when the signal rises sharply (positive difference) and is confirmed only when it begins to descend (`difference < 0`).
- Validation Thresholds: To avoid false positives from finger movements or electrical noise, two control conditions are applied:
    - Minimum Amplitude: The detected variation (`max_change`) must exceed a threshold of 15 units. If the wave is too small, it is discarded.
    - Period: A safety interval of 250 ms (`heartbeat_interval`) is established. This prevents the same beat from being counted twice consecutively (debounce effect).

Finally, the calculation of beats per minute (BPM) is performed by time windows: the system counts validated beats during a 15-second cycle and multiplies the result by 4 to project the final value.

Something not taken into account in Figure 36 is that the finger position must be as shown in Figure 37. If the finger is not correctly positioned, readings will be erroneous due to variation in light incidence on the phototransistor.

Use for medical/health purposes is not recommended in the prototype state as used in this project. Measurements may vary from reality.

2.37. KY-040 Rotary Encoder

It is a digital input device that detects infinite rotation in both directions. It generates pulses on two lines (CLK and DT) with a 90-degree phase shift, allowing for the determination of both movement and direction.

The code employs state comparison logic, storing the previous clock value in a **global variable** (last_clk). Upon detecting a state change, it compares the Data Pin (DT) reading with the clock (CLK) reading: if both states are different, the system determines the rotation is clockwise; if they are equal, the rotation is counter-clockwise. Additionally, it reads the SW Pin to detect axis pressing.

Figure 38 details the connection of the three required signal lines (CLK, DT, and SW) to the microcontroller.

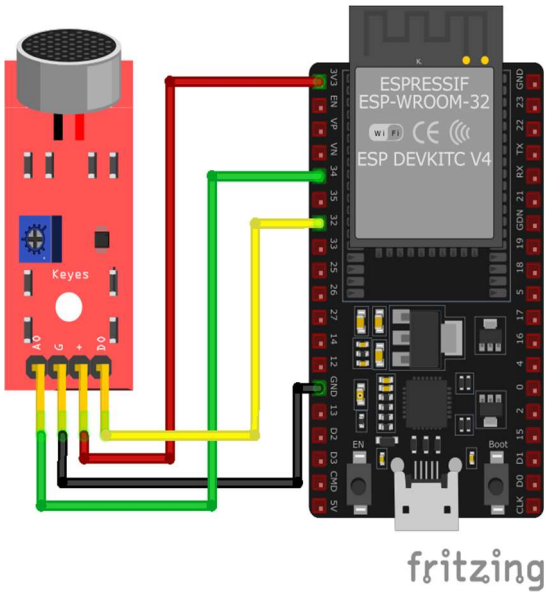

Figure 35. KY-038 connection diagram.

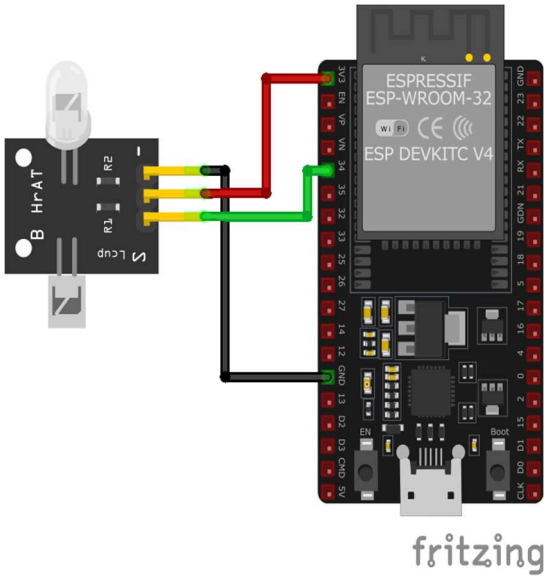

Figure 36. KY-039 connection diagram.

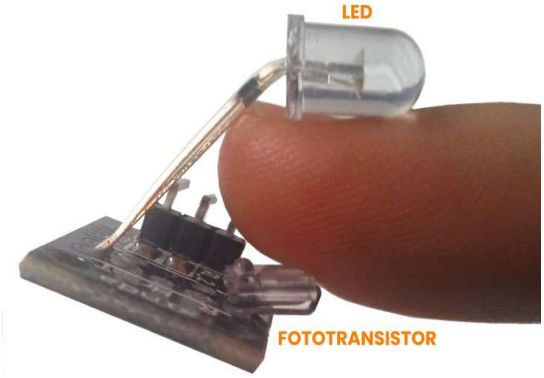

Figure 37. Correct finger position.

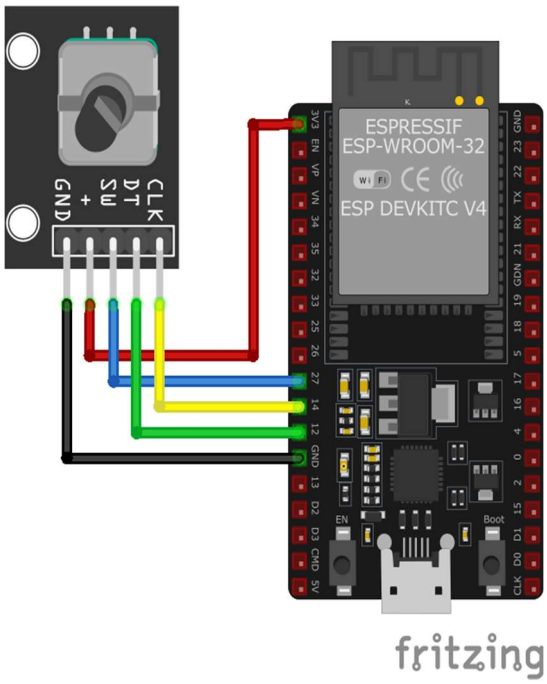

Figure 38. KY-040 connection diagram.

3. Results

3.1. Electrical Adaptation and Hardware Compatibility

The compatibility of the 37 modules was experimentally verified:

- Digital/Switch Sensors: 100% of the switch-type modules (e.g., KY-002, KY-004, KY-020) functioned correctly using 3.3V power or the microcontroller's internal pull-up resistors, with no need for logic level converters.
- Output Modules (Actuators/LEDs): A critical need was identified to recalculate and substitute limiting resistors in light-emitting modules (KY-005, KY-009) to adapt the current to the ESP32 ports.
- Analog Sensors: It was confirmed that reading analog sensors (e.g., KY-013, KY-035) is functional, although the non-linearity of the ESP32 ADC at the scale extremes (near 0V and 3.3V) must be considered.

3.2. MicroPython Software Implementation

A successful migration of the entirety of the example code from C++ (Arduino) to MicroPython was achieved, obtaining more readable and modular scripts.

The analog reading algorithms were optimized to take advantage of the 12-bit resolution of the ESP32, obtaining values in the range of 0 to 4095, which represents a significant improvement in precision with respect to the 10 bits (0-1023) typical of the previous platform.

The functioning of specific MicroPython libraries (onewire, ds18x20, dht) was validated for the management of complex sensors like the KY-001 and KY-015, simplifying the acquisition of temperature and humidity data.

3.3. Calibration and Sensitivity Adjustment

Modules equipped with **LM393** comparators (e.g., KY-024, KY-025, KY-037) required mandatory manual calibration via their integrated potentiometers. Adjusting the trigger threshold proved determining for the proper functioning of digital outputs, especially in environments with variable noise or lighting.

3.4. Generation of Didactic Resources

Como resultado final del proyecto integrador, se consolidó una guía técnica unificada que incluye 37 esquemas de conexión realizados en software de diseño (Fritzing) y más de 37 scripts de programación. Este material elimina la dispersión de información y reduce la barrera de entrada para futuros estudiantes que deseen utilizar estos periféricos con tecnologías modernas de 32 bits.

4. Conclusions

The realization of this Integrative Practical Work has allowed validating the technical viability of migrating the 37-sensor kit, traditionally associated with 5V Arduino environments, towards the ESP32 architecture operating at 3.3V.

It is concluded that the main barrier for this transition is not logical compatibility, but the electrical adaptation of the output modules (actuators and LEDs), which was effectively resolved through the recalculation of

limiting resistors. On the other hand, the implementation of MicroPython proved to be a superior tool for the educational field compared to C++, allowing a cleaner syntax, a more intuitive handling of data structures, and an efficient management of hardware resources, such as the 12-bit resolution of the ADC.

Finally, the generated material constitutes a significant contribution for the course, providing future students with a solid documentary base, verified connection schematics, and functional scripts that reduce the initial learning curve, thus fostering the development of more complex and robust engineering projects.

References

Aguirre, C. (2021, July 2). *Detecta tu ritmo cardíaco a través del KY-039 [Detect your heart rate through the KY-039]*. Blog UNIT Electronics. https://blog.uelectronics.com/tarjetas-desarrollo/detecta-tu-ritmo-cardiaco-a-traves-del-ky-039/

Arduino Modules Info. (n.d.). *Arduino Modules Info*. https://arduinomodules.info/

ETC2. (n.d.). *49E* [Datasheet]. Alldatasheet. https://www.alldatasheet.com/datasheet-pdf/view/1756120/ETC2/49E.html

flaix. (2020, October 12). *KY-040 Rotary Encoder breakout board part* [Online forum post]. Fritzing Forum. https://forum.fritzing.org/t/ky-040-rotary-encoder-breakout-board-part/11073

Murky Robot. (n.d.). *KY-038* [Guide]. https://www.murkyrobot.com/guias/sensores/ky-038

PIBSAS. (n.d.). *RaspberryPiModules* [Software repository]. GitHub. https://github.com/PIBSAS/RaspberryPiModules

SYC. (n.d.). *A3144EUA* [Datasheet]. Alldatasheet. https://www.alldatasheet.com/datasheet-pdf/view/2168881/SYC/A3144EUA.html

vanepp. (2017, July 18). *From prototype to product* [Online forum post]. Fritzing Forum. https://forum.fritzing.org/t/from-prototype-to-product/4186/6